REV.	ECN.NO.	NAME	DATA
A0	NEW	MIN-D	2020-11-24

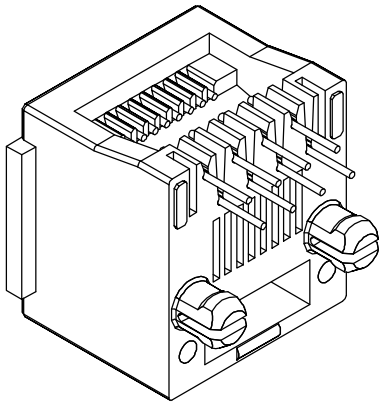

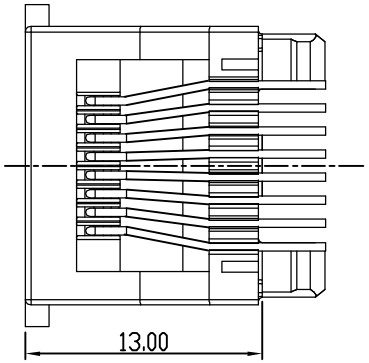

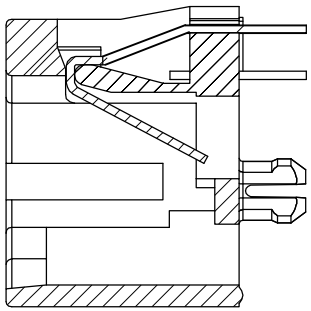

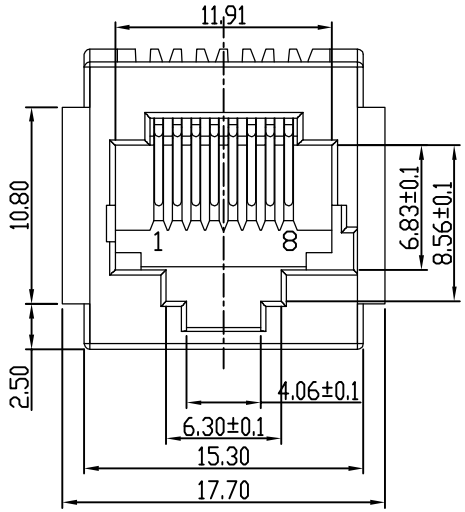

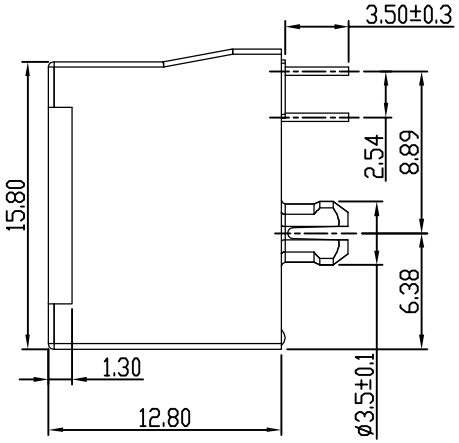

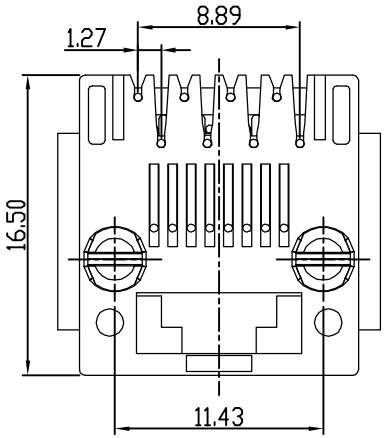

SPECIFICATION NOTES:

ELECTRICAL:

1. VOLTAGE RATING: 125 VAC RMS
2. CURRENT RATING: 1.5 AMP
3. CONTACT RESISTANCE: 30mΩ MAX.
4. INSULATION RESISTANCE: 1000MΩMIN. AT 500V DC.
5. DIELECTRIC STRENGTH: 1000 VAC 50Hz 1MINUTE

MECHANICAL:

1.HOUSING MATERIAL:
SEE PART NUMBER.
2. CONTACTS:ø0.46mm PHOSPHOR BRONZE,GOLD PLATING OVER NICKEL
3. OPERATING LIFE:750 CYCLES MIN.
4. MATING FORCE: 30N MAX.
UNMATING FORCE: 30N MAX.

ENVIRONMENTAL:

1. STORAGE:-40°C TO +85°C
2. OPERATION: -40°C TO +85°C

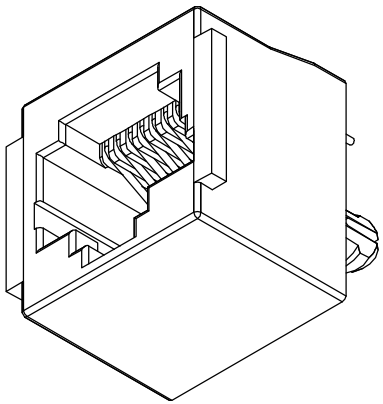

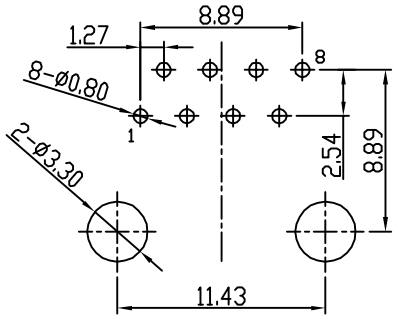

Recommend PCB Layout
THICKNESS=1.6mm
TOLERANCES:±0.05

PART NUMBER:

52-XX 88 X X X 0-A

- XX: 1x1: 11
- 88: 8P8C:88
- X: Plating 电镀
  - Fu" : 1
  - 1u" : 2
  - 3u" : 3
  - 6u" : 4
  - 15u" : 5
  - 30u" : 6
  - 50u" : 7
- X: COLOR(颜色)
  - 1.BLACK(黑色)
  - 2.GRAY(灰色)
  - 3.BLUE(蓝色)
  - 4.YELLOW(114C黄)
  - 5.WHITE(白色)
- X: Material 材质
  - A:PBT
  - B:PA66
  - C:PA46
  - D:PA46 无卤
- 0: 全塑
- A: 有耳
- B: 无耳

DETACHED LISTS	MM (INCH) 公差 TOLERANCES: MM .0 ± 0.20, .00 ± 0.15, .000 ± 0.075; MM .0 ± 0.38, .00 ± 0.25, .000 ± 0.15; 角度 (ANGLES) ± 1.5°	绘 图 (Designed) MIN-D 2020-11-24	XWJ 东莞市欣旺久电子有限公司 XIN WANG JIU Electronics Co.,Ltd
		审 核 (Checked)	系列 (SERIES): 名称 (NAME)
		批 准 (Approved)	RJ: XWJ-5222-A 8P8C 短体 带耳
		材 料 (Material) SEE NOTES	图号 (DWG NO.): 版本 REV. A0
	第三角视图	比 例 (SCALE) 1:1	料号 (PART NO): 52-XX88XXX0-A
			单位 (UNIT): MM 共 (SHEET) 1 页 第 (OF) 1 页